STRATHFIELD PARTNERS
REAL ESTATE AGENTS

8/86 Railway Terrace Merrylands NSW

2 2 1

Attention first home buyers and investors.

Set in a medium sized development of only 32 apartments located 250 metres from Merrylands station and sure to impress the astute investor or first home buyer.

Features include:
- Designer kitchen with stainless steel, gas appliance
- Ultra-modern bathroom with freestanding bathtub
- Open plan living and dining flowing onto a huge balcony
- Split system air-conditioner, timber floors and secure car space
-

Type : Apartment
View : https://www.strathfieldpartners.com.au/sale/nsw/parramatta/merrylands/residential/apartment/6289653

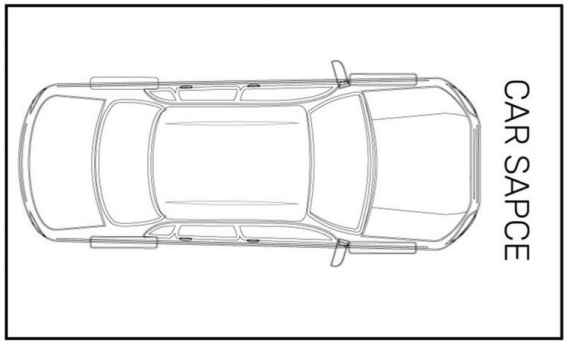

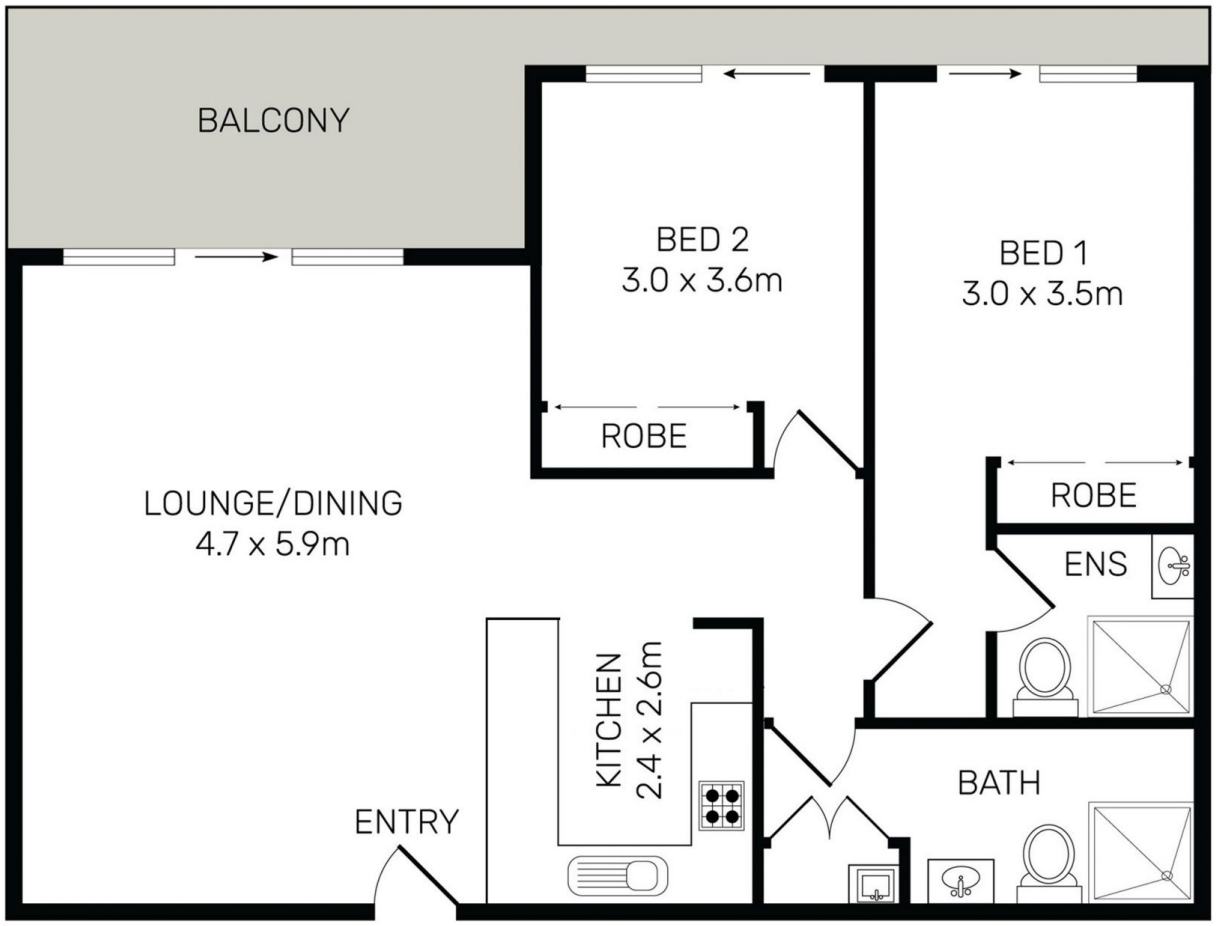

STRATHFIELD PARTNERS
REAL ESTATE AGENTS

5/86 Railway Terrace Merrylands

N

Dimensions are approximate. All information contained is gathered from sources we believe to be reliable.
However, we cannot guarantee its accuracy and interested party should rely on their own enquires.

(02) 9763 2277